Packaging of active devices using plastic injection moulding

L. Seffner[1], T. Moritz[1], A. Schönecker[1], H.-J. Roscher[2], Chr. Anselment[3], D. Just[3]
[1] Fraunhofer Institute for Ceramic Technologies and Systems, Dresden, Germany
[2] Fraunhofer Institute for Machine Tools and Forming Technology, Chemnitz, Germany
[3] Fraunhofer Institute for Chemical Technology, Pfinztal, Germany

Abstract:
The concept of adaptronic systems proved to be a successful approach on laboratory scale worldwide, but up to now no large-scale, commercial applications were launched at the market. There is an essential need for series production methods, to preassemble the manifold of individual parts building an active compound device. Benefits are expected by reducing the expenditures for assembly, higher robustness against mechanical stress or environmental factors and thus prevention of damage during system production. This paper describes the process chain for manufacturing a complex compound device using plastic injection moulding as a series technology. Such compounds offer new application areas for example in automotive production or as power actuators for micro technology, handling and actuator systems.

Keywords: piezoelectric actuators, plastic injection moulding, active compound device

Introduction

The viability of adaptronic constructions has been verified on laboratory scale worldwide, but up to now no large-scale, commercial applications were launched at the market. Still, the industrial implementation suffers from deficits, in the first place the lack of series compatible assembling technologies for the manifold of individual units.
We take a two step technology as appropriate approach to achieve series compatible productivity, firstly preassembling component parts to build an active compound device and secondly producing the adaptronic construction. The problem with compound devices lies in the requirement to arrange active and passive, mechanical and electrical components with high accuracy on micrometer scale within or aside the load path of the structure.
With the present investigation, we introduce plastic injection moulding as an established series technology for preassembling component parts. The approach combines the assembly of all single units (multilayer actuators, prestressing elements, mechanical and electrical interfaces) and compound device manufacturing in one single step.

Risk estimation and process analysis

Plastic injection moulding as manufacturing technology for active compounds has been used in a limited number [1, 2] so fare. This is because of expected damages of individual units, which are exposed to high thermal and mechanical loads during processing.
Here we designed and prepared two different prototypes in order to deduce usable process windows to fabricate robust, versatile active compound devices. Multilayer actuators of PI Ceramic GmbH were used as active components.

At the beginning of this work the following problems were rated as critical and risky:

- Influence of the process conditions (temperature, pressure, process time) on the functionality of the single parts to be assembled
- Acceptable tolerances of the individual parts and their arrangement
- Adhesion of the polymer on the surface of the single components,
- Design of the internal electrical wiring,
- Design of the electrical and mechanical interfaces

Approach

The following investigations were performed in the sequence described here, to minimize the risks:

1. Preliminary investigations to estimate adhesion of several polymers on the surface of the individual components, to find out proper processing conditions and to select a suitable polymer
2. CAD design of all examples including all single components and interfaces
3. Construction of all components and inserts for the injection tool
4. Manufacturing of all tools and individual parts
5. Fabrication and characterisation of the prototypes

Results of preliminary investigations

The following polymers were selected to test the adhesion on the surface of the metallic and ceramic components:

ABS – acrylonitrile butadiene styrene copolymer
(Toyolac 250-X10; Toray Plastics)
PBT - polybutyleneterephtalate
(Pocan B 1600; Lanxess)
POM - polyoxymethylene
(Hostaform C 13021; Ticona)
PC - polycarbonate
(Makrolon 2800; Bayer)

All these polymers were found not to adhere, neither on the surface of the multilayer actuators nor on the metallic parts. Therefore, a good mechanical connection of the polymers can only be achieved using tight fits, undercuts or polymer shrinkage.
So, polymers were selected in view of processing conditions. ABS was selected for all further investigations and manufacturing of prototypes. This plastic material needs a processing temperature of about 240 °C and shows shrinkage of approx. 0.5 %.
Standard electronic solders may melt or soften under the influence of heat during plastic injection into the cavity. Therefore, a test was performed to check if soldered connections are suited to create all internal and external electrical contacts. Accordingly, two wires AWG 28 were soldered at every electrode of six actuators. For this purpose two solder compositions with different melting points were used:

lead free solder: S-Sn95.5Ag3.8Cu0.7, T_s=217 °C
lead solder: Sn85Pb13.5Ag1.5, T_s=301 °C

After overmoulding, all soldered contacts were examined easily by measuring the capacity or resistivity. None of the solder pads failed, this means that both types of solders can be processed under conditions relevant for ABS. The lead solder Sn85Pb13.5Ag1.5 was utilized for manufacturing the prototypes.

Design of the prototypes

Two different prototypes were created to exemplify all possibilities of plastic injection moulding. The first example was a single multilayer actuator covered with ABS, metal caps at both end faces and two wires for electrical connection (CAD model see Fig. 1). The second one was an actuator with inherent strain transmission consisting of a differential arrangement of two multilayer actuators (CAD model see Fig. 2).

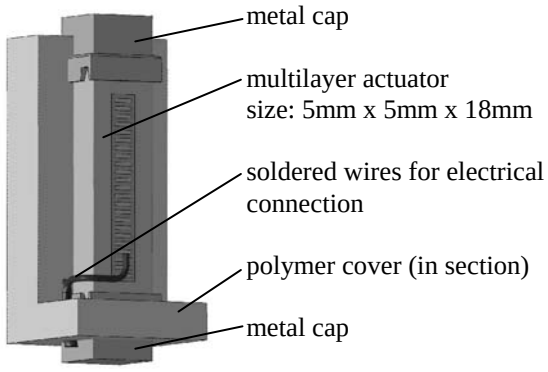

Fig. 1: *Design and individual parts of prototype 1*

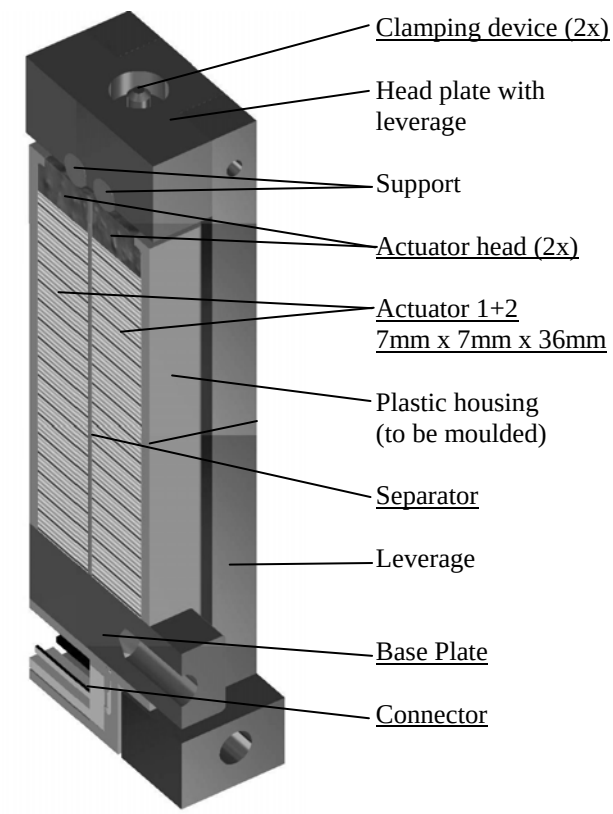

Fig. 2: *Design and individual parts of prototype 2 in section (underlined parts were placed in the moulding injection tool and covered with plastic)*

Prototype 2 was an active compound with complex construction by means of which several problem areas were demonstrated simultaneously:

- Joining a lot of individual components to one active compound device
- Internal wiring of more than one active element and the electrical and mechanical insulation
- Integration of a plug-in connector as outside electrical interface

Prototype 2 combines two actuators arranged onto a metallic base plate with fastening possibilities. The plug is arranged below the base plate. Both parts are mechanically connected with the plastic housing.
At the top end actuator heads are placed, which are rigidly connected with the actuators by the plastic housing. The support cylinders transfer applied forces into the head plate. The head plate can be toppled when the displacement of both actuators is different. Strain transmission takes place by using the leverage mounted outside.
The distance between the two support cylinders in the head plate is variable. In this manner a different strain transmission can be achieved only by changing the head plate.
The head plate is secured by two clamping elements, which allow for adjusting the preload value. A two port amplifier was used to drive both actuators in polarisation direction only.

Design of the injection tool

The injection tool was built up modular. So, a simple change of the inserts allowed one to manufacture both prototypes with one injection tool. Following requirements were taken into consideration during the course of injection tool design:

1. Injection moulding process with applicable preload
2. Base plate should be covered partially only, requiring exact positioning and sealing
3. Short free wiring between electrodes and plug
4. Sealing the plug-in connector to keep contacts free of plastic
5. Appropriate melt flow guidance
6. Appropriate positioning of the ejector pins

All individual parts of prototype 2 were preassembled outside the injection tool using auxiliary tools.
Afterwards, the complete assembly was set into the injection tool.

Manufacturing of active compound devices

Manufacturing of all prototypes was performed using the injection moulding machine Allrounder 370C (ARBURG GmbH). The assembly group mounted in the injection tool can be seen in Fig. 3 and Fig. 4.

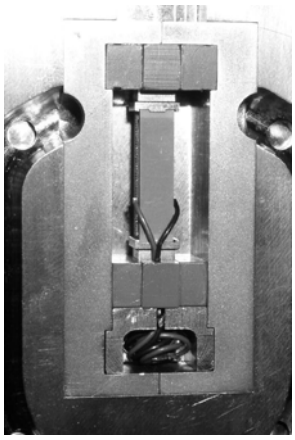

Fig. 3: *Prototype 1 mounted in the injection tool*

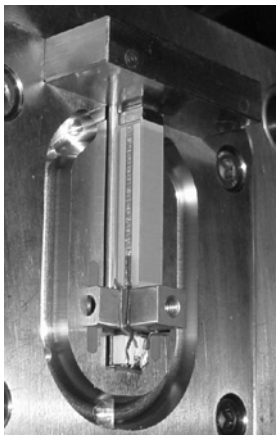

Fig. 4: *Prototype 2 mounted in the injection tool*

Fig. 5: *Prototype 1 after demoulding*

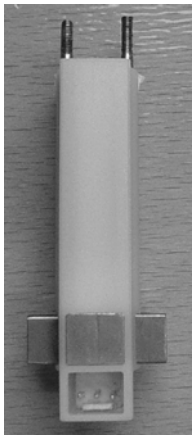

Fig. 6: *Prototype 2 after demoulding*

Prototype 2 was completed after manufacturing with leverage for strain transmission. The finished device can be seen in Fig. 7.

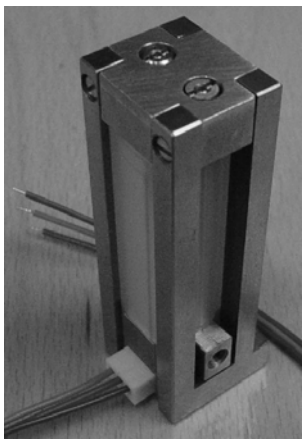

Fig. 7: *Prototype 2, actuator with strain transmission, fully mounted*

Results

Prototype 1

All manufactured prototypes were found to be completely working. This was determined by means of capacitance and strain measurements of all compounds. Measured capacitance values before and after plastic injection moulding are compared in Fig. 8.

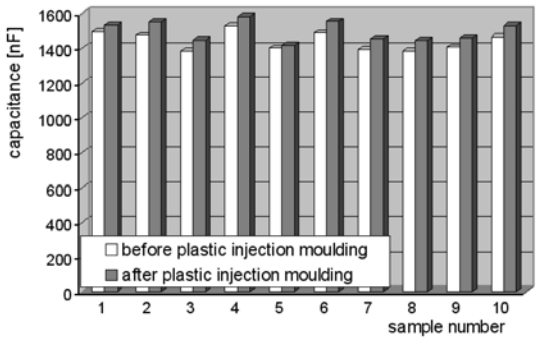

Fig. 8: *Comparison of capacitance of prototype 1 actuators*

The average capacitance values were found to increase by 4 % after plastic injection moulding.
Free strain of the actuators is reduced by an average of 15% due to the influence of plastic coating (see Fig. 9).

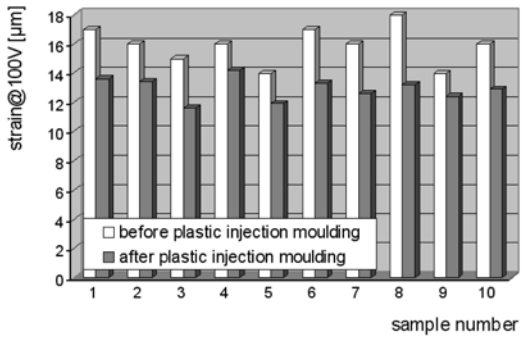

Fig. 9: *Comparison of free strain of prototype 1 actuators*

Prototype 2

Capacitance was reduced by an average of 5 % after covering the prototype 2 assembly with ABS.
Measurements of free strain and blocking force and device analysis showed possible design improvements for the next optimization cycle. Free displacement of actuator leverage was measured to be only 35 % of the theoretical values. This can be attributed to inaccuracies in the manufacturing of the head plate and a too low mechanical preload. Blocking force data achieved an average of 65 % of the theoretical values. In this case the stiffness of the strain transmission has to be improved constructively.
Samples of prototype 2 were tested under cyclic load in order to get a first valuation of degradation modes. Special attention was given to the interface between the actuator surface and the matrix polymer to learn about possible damages of the actuator side electrodes.
During the preliminary investigations it became apparent that side electrodes are covered with plastic completely. So a permanent shear stress could disconnect single layers of the actuators with time. This may lead to a drastic decrease of capacitance. Cyclic load was performed with 100 V sinusoidal AC voltages with a frequency of 20 Hz. After $1.5*10^7$ cycles capacitance amounted to about 90-95 % of the starting values and no significant degradation of the properties was observed during cyclic load.

Summary

The technology of plastic injection moulding is applicable to create robust and complex active compound devices, which can be utilized in adaptive constructions.
Prototypes were manufactured containing an assembly of active components (multilayer actuators), passive units and electrical and mechanical interfaces. Technological experiences were collected with regard to the design of the injection tool and applicable processing parameters. These experiences are transferable to other designs of active compounds. Such compounds offer new application areas for example in automotive production or as power actuators for micro technology, handling and actuator systems.

Acknowledgement

This work was funded by the Fraunhofer-Gesellschaft within the framework of a special program for SME customers.

References

[1] Patent EP 1588782
[2] Patent US 6639988